Alex Morgan

Mechanical engineering student: design and test portfolio

alex@example.com · Bristol, UK

Fictional teaching example. Alex Morgan, the projects and the drawings were written for FolioBuild's mechanical engineering portfolio guide. Nothing in this document is a verified engineering result or a real application. Study the layout, then replace every detail with your own work and evidence.

Introduction

I am a mechanical engineering student interested in design and test work, and I am looking for a placement where I can develop both. This short portfolio covers one coursework project in depth: a mounting-bracket study in which I owned the CAD model, the drawing and the analysis notes. A summary of a group test-fixture project follows on page 3.

Physical testing of the bracket has not started. Page 2 sets out what the analysis assumed, and page 3 explains what it does not cover.

Mounting bracket: design and analysis study

Context	Coursework design study. The bracket holds a sensor housing beside a test rig.
My role	CAD model, drawing and analysis notes. The rig was designed by another team member.
Status	Analysis complete for one load case. Physical testing not started.

Drawing

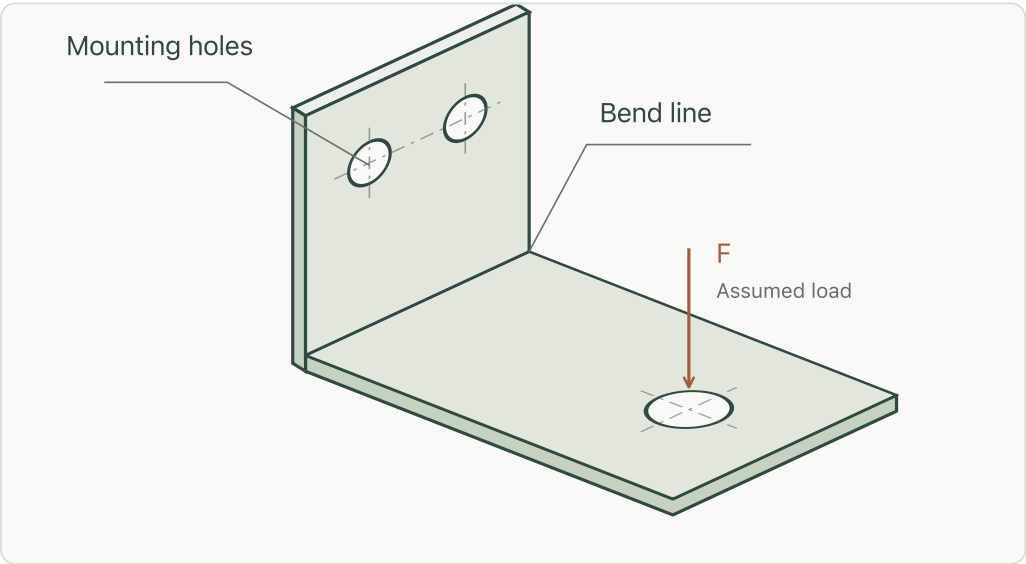

Concept drawing, not to scale. The two holes on the upright flange match the existing rig, so their positions stayed fixed through every revision. In your own PDF, add the dimensions, units and revision you are allowed to share.

Design decision: protect the cable clearance

The sensor cable runs above the arm, so the space marked below had to stay clear. I compared two ways of supporting the arm: a triangular gusset across the bend, and a plain bend with a larger inside radius. The gusset sat inside the cable clearance and would have added a welding step. I chose the plain bend. It keeps the clearance open and leaves the mounting holes where the rig needs them. I then checked it using the assumptions in the table.

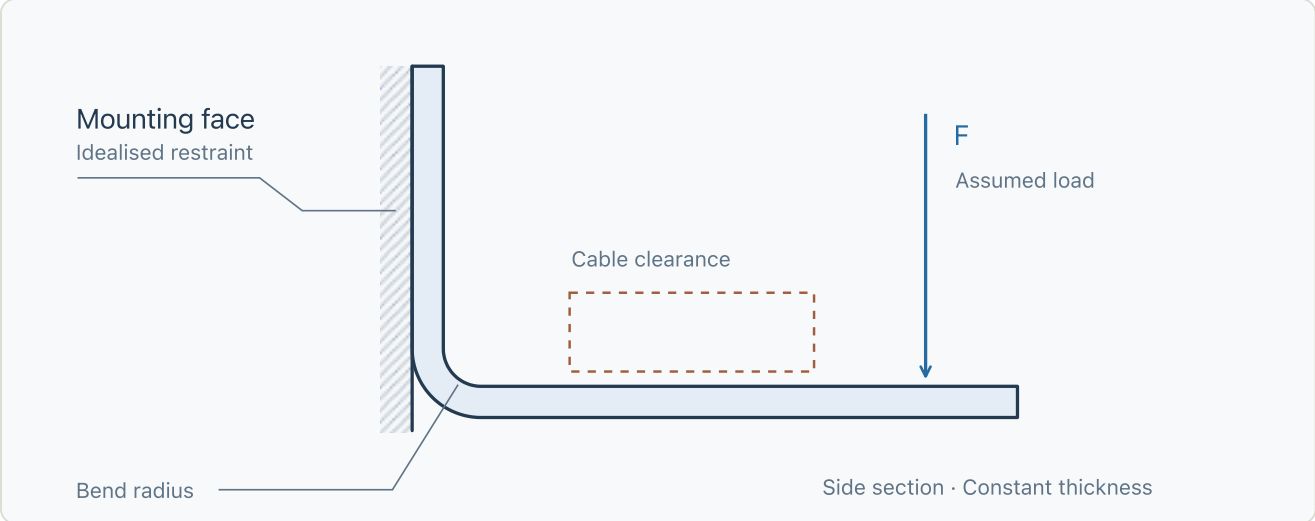

Analysis schematic showing the restraint, assumed load and cable clearance. It is not a dimensioned manufacturing drawing.

Analysis assumptions

Static analysis of the plain-bend bracket, one load case

Item	Assumption	Why it matters
Load	One static load, applied downwards at the arm hole. The value comes from the coursework brief.	Vibration from the moving rig is not included.
Restraint	Mounting face fixed in every direction.	Real bolts allow some movement, so the model may be stiffer than the part.
Material	Linear elastic and isotropic, with properties from the supplier’s datasheet.	The material itself was not tested.
Geometry	Constant thickness, bend radius and holes modelled, small cosmetic edges removed.	Removed features could change the local stress.
Mesh	Refined at the bend, with the result compared at two mesh sizes.	Shows whether the reported stress depends on the mesh.
Hand check	The arm treated as a simple cantilever from the bend.	A rough check on the size of the result, not a second analysis.

> In your own PDF, give each load and material value with its units. This example leaves them out because the project is fictional.

Validation limits

This is a design study. It is not a certified load rating, and it does not show that a manufactured part passed a test.

- No physical load test has been carried out.
- The fixed mounting face ignores bolt preload and any flex in the rig.
- The load case is static. Fatigue and vibration from the rig are not covered.
- Material properties come from a datasheet rather than a test of the stock used.

My next step is to compare the analysis with a permitted test on the rig, agreed with my supervisor, and to record any difference between the two.

Test fixture: assembly drawing and trial fit

Context	Group project to build a test fixture.
My role	Assembly drawing and trial-fit notes. Other team members designed the instrumentation.
Status	Access feature revised after the first assembly. A repeated measurement study is planned.

I prepared the assembly drawing and recorded the issues we found during a trial fit. The first assembly made adjustment difficult, so I revised an access feature and updated the drawing. My portfolio website shows the revision and the trial notes in full.

About this example

This PDF accompanies the mechanical engineering portfolio example guide at foliobuild.co.uk/blog/mechanical-engineering-portfolio-example. It is an editorial example to study and adapt. FolioBuild publishes portfolio websites and does not export PDFs; this document was laid out separately.

Follow the employer’s instructions on format, length and file size. Check that you have permission to share coursework, team material and drawings before you include them.